Nußbaum
HEBETECHNIK

2.50 SE

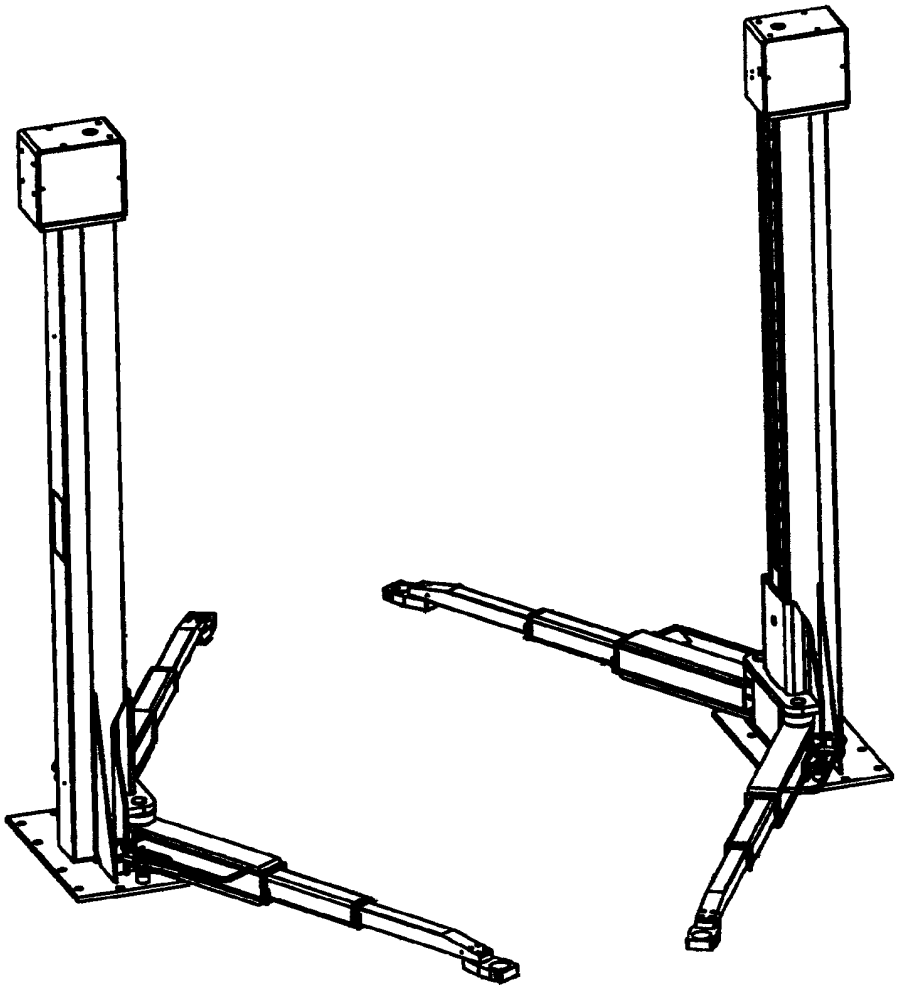

Operating instruction and documentation

serial-number.....

Table of contents

Appendix

☞ **Send this record, filled out and signed to Nußbaum after the installation**

Otto Nußbaum GmbH & Co.KG

Korker Straße 24

777694 Kehl-Bodersweier

Germany

Record of installation

The automotive lift 2.50 SE with the

serial number.: ..... was installed on .....

at the firm..... at.....

the saftey mechanism and operation were checked.

The installation was done by the operater / competent person (please delete as applicable)

The safety of the automotive lift was checked by the person before the initial operation

The operater attests, the correct installation of the automotive lift. The competent person attests the correct initial operation.

.....	.....	.....
date	name of the operater	signature of the operater
.....	.....	.....
date	name of the competent person	signature of the competent person

Record of handing over

The automotive lift 2.50 SE with the

serial number.: ..... was installed on .....

at the firm..... at.....

The persons below were instructed after the installation of the automotive lift. The instruction was carried out by a technician of the lift-manufacturer or by a competent person. The persons below are fully familiar with the contents of this manual.

.....	.....	.....
date	name	signature
.....	.....	.....
date	name	signature
.....	.....	.....
date	name	signature
.....	.....	.....
date	name	signature
.....	.....	.....
date	name	signature
.....	.....	.....
date	name of the competent	signature of the competent

1. Introduction

The document **”Operating Instructions and Documentation”** contains important infomation about installation, operation and maintenance of the 2.50 SE.
To furnish proof of **installation of the automotive lift** the form ”Record of Installation” must be signedand returned to the manufacturer.
To furnish proof of the singular, felt this documentation contains forms. The forms should be used to document the checks. They should not beremoved from this documentation.
Every **Changes to the construction** and **displacement** of the automotive lift must be registered in the **”Master document”** of the lift.

Installation and check of the automotive lift

Only specialist staff is allowed to do work concerning safety and to do the safety checks of the lift. They are called experts and competent person in this document.

Experts are persons (for example self-employed engineers, experts) which have received instruction and have experience to check and to test automotive lifts. They know the relevant labour and accidents prevention regulations.

Competent person are persons who have acquired adequate knowledge and experience with automotive lifts. They took part in training from the lift-manufacturer (servicing technicians of the manufacturer or dealer, are Competents)

Information of Warning

To show **danger** and to show important information the three symbols below are used. Pay attention to those passages, which are marked with these symbols

Danger!
This sign indicates danger to life. Inexpert handling of the descriped operationmay be dangerous to life.

Caution!
This sign cautions against possible damage to the automotive lift or other material defects in case of inexpert handling .

Attention!
This sign indicates for an important function or other important notes.

2. Master document of the automotive lift

Lift designation	2.50 SE
Lift-manufacturer	Otto Nußbaum GmbH & Co.KG Korker Straße 24 77694 Kehl-Bodersweier Germany

Application

The automotive lift 2.50 SE is a lifting stage for lifting and repairing vehicles with a laden weight of 5000 kg. The load of one carrying arm must not be more than 1500 kg. It's not allowed to put the load only on one of the carrying arms, just as it is not allowed to install the lift in rooms with danger of explosion.
After changing construction and after repairings the lift has to be checked from an expert again. The operating instruction and the instruction for maintenance have to be observed.

☞ **Changes of construction, repairings and changes of place must be registered in this master document**

Changes of the construction, expert checking, resumption of work (date, kind of change, signature of the expert)

.....
.....
.....

.....
name, address of the expert

....
place, date signature of the expert

Change of automotive-lift-place, expert checking, resumption of work (date, address and signature of the competent)

.....
name, address of the competent

....
place, date signature of the competent

CE-certificate/attestation of conformity

The automotive lift 2.50 SE with the serial number .....
is in accordance with the tested lift (number 04205-1381/95)

....

place, date company stamp, signature

ZERTIFIKAT

CERTIFICATE

RWTÜV
ANLAGENTECHNIK GMBH

Registrier-Nr./*Registered No.:*
04 205-1381/95

EG-Baumusterprüfbescheinigung gemäß Anhang VI der EG-Richtlinie 89/392/EWG
EC-type approval according to appendix VI of the EC-directive 89/392/EEC

Zeichen des Auftraggebers *Reference of applicant*	Auftragsdatum *Date of application*	Aktenzeichen *File reference*	Prüfbericht Nr. *Test report No.*	Ausstellungsdatum *Date of issue*	Gültigkeit bis *Expiry date:*
Müller	30.03.95	7.2-1448/95	2933/95	08.09.1995	08.09.2000

Hiermit wird bestätigt, daß das nachfolgend genannte Produkt den grundlegenden Anforderungen der Richtlinie des Rates vom 14.06.89 zur Angleichung der Rechtsvorschriften der Mitgliedstaaten über Maschinen, sowie der Änderung 91/368/EWG und 93/44/EWG, entspricht.
We hereby certify that the product mentioned below meets the basic requirements of the council directive dated 14.06.89 on the approximation of the laws of the member states relating to machinery, as well as the amendments 91/368/EEC and 93/44 EEC.

CE 0044

Antragsteller / ***Applicant:*** Otto Nußbaum GmbH, Korker Str. 24, 77694 Kehl

Fertigungsstätte: / ***Manufacturing plant:*** s.o.

Produktbeschreibung: / ***Product description:*** Fahrzeughebebühne Typ : 2.50 SE

TÜV CERT - Zertifizierungsstelle der RWTÜV Anlagentechnik
im Institut für Produkterprobung und Werkstofftechnik, notifiziert bei der EG-Kommission unter Nr. 0044

RWTÜV Anlagentechnik GmbH
Institut für Produkterprobung und Werkstofftechnik
Langemarckstr. 20
45141 Essen
Tel.: +201-825-3216
Fax : +201-825-3209

3. Technical information

Technical ratings:

Lifting capacity 2.50 SE:	5000kg
Lifting capacity of one carrying arm 2.50 SE:	max. 1500 kg; It's not allowed to put the load only on one of the carrying arms
height of lifting:	max. 1870 mm
Line voltage:	400 V three phase current
Driving voltage:	230 V
Power rating:	2 x 2,2 kW
Sound level:	≤ 75 dBA

Safety devices

1. Safety switching in case the carrying nut breaks
   check of the carrying nut with built-in pin
2. Limit switches for top and lowest position
   Safety device of the lift against too much lifting or lowering of the carriage
3. foot protector
   Safety device of the lift against squashing.

Data sheet 2.50 SE

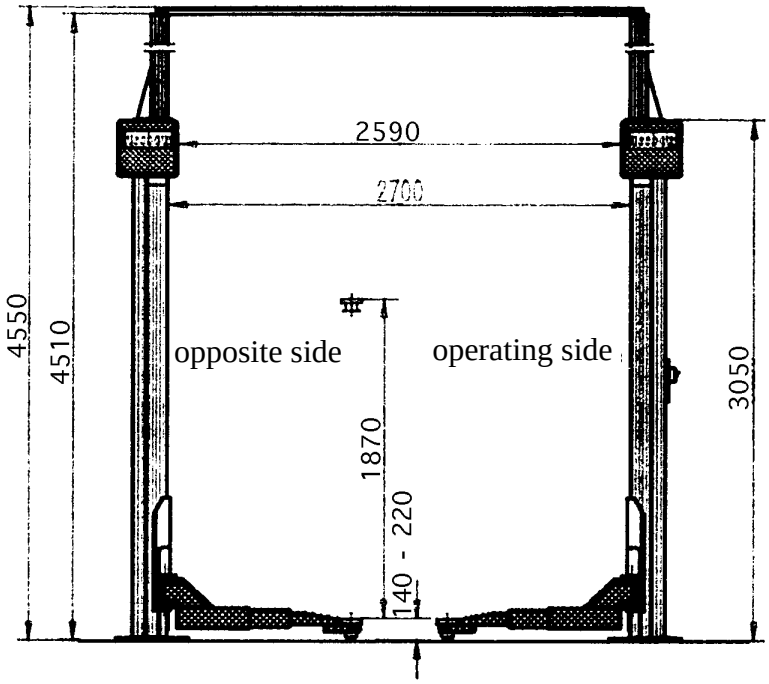

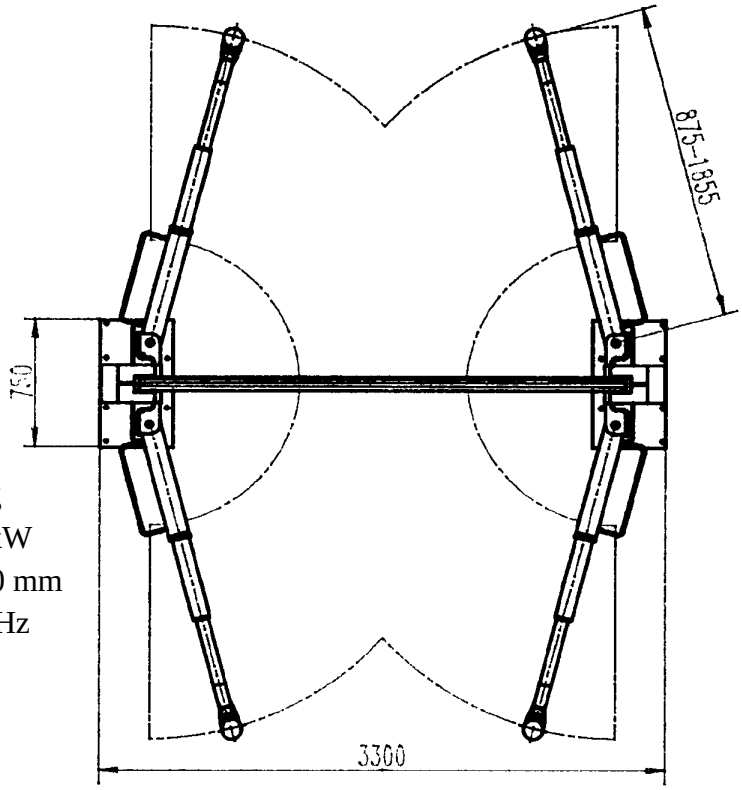

lifting capacity : 5000 kg
power rating : 2 * 2,2kW
lifting height : max.1870 mm
line voltage : 400V, 50 Hz

Foundation plan

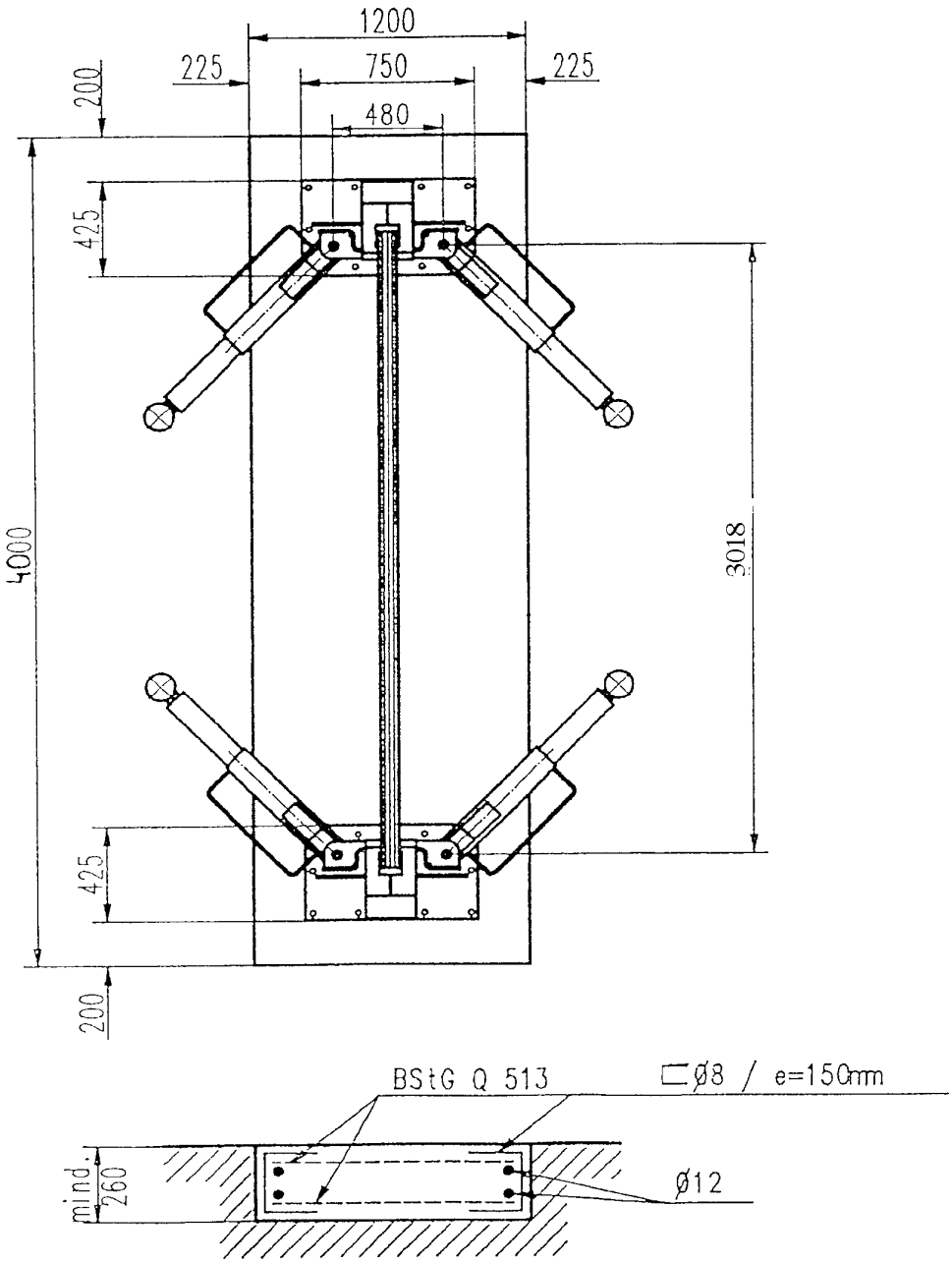

reinforcement in both directions at the upper and lower side of the plate min 4 cm^2/m
(for example structural steel Q 513)
revolving Ø8 / e = 150 mm
at the edges Ø 12
concrete quality min. B 25 (DIN 1045)
concrete covering for stiffenig steel 2 cm
foundation base: frost-protected floor!

Electrical diagram part 1

fuse
3 x T 16 A
by customers

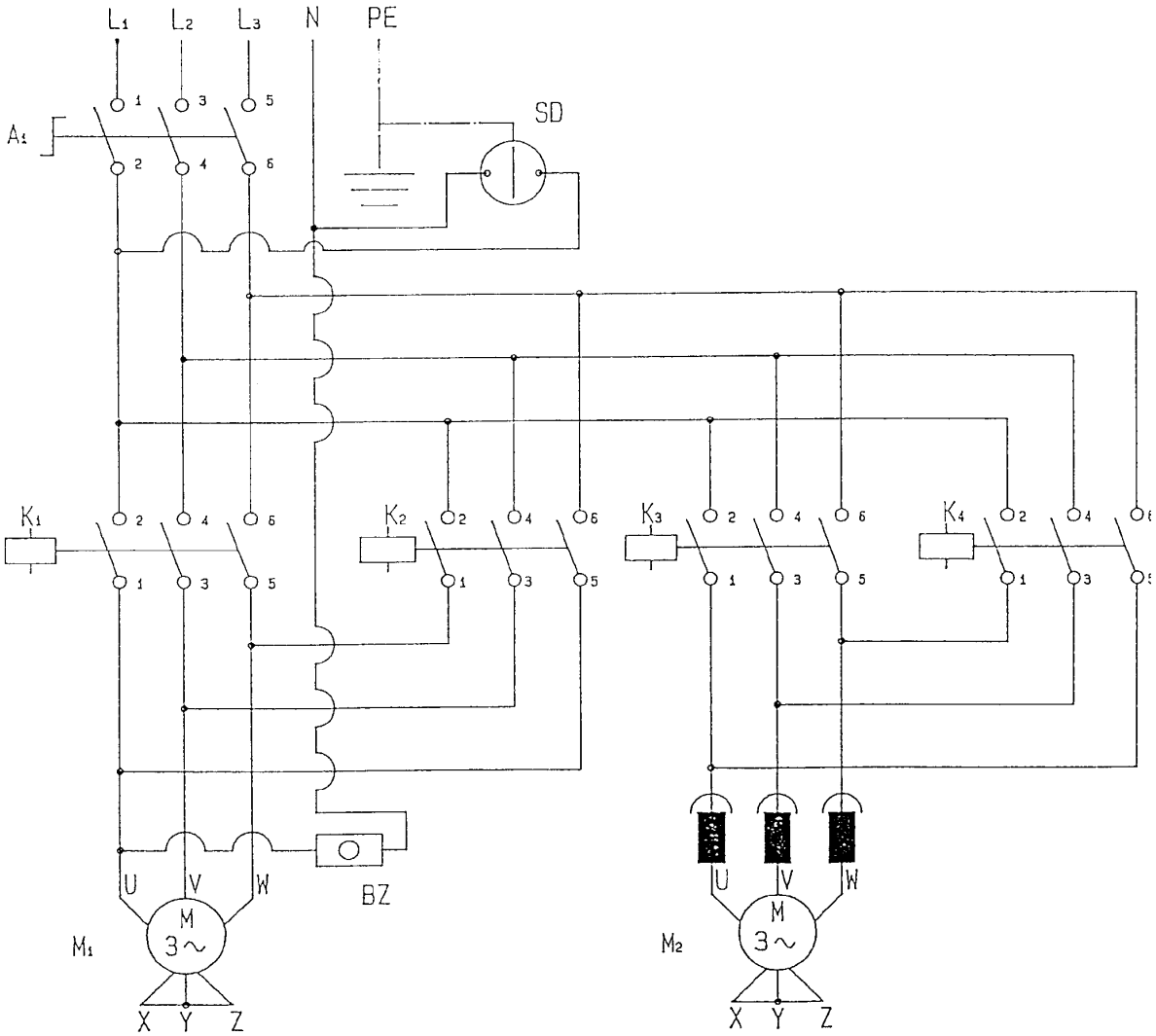

power supply: 3 phases/N + PE; 50 Hz 400/230V

choice of the protection measures: look of the local security regulations (BRD: VDE 0100)

by customers: electrical power line is to be secured with time-lag fuse 16 A; min wire-Ø: 1,5 mm2

Electrical diagram part 2

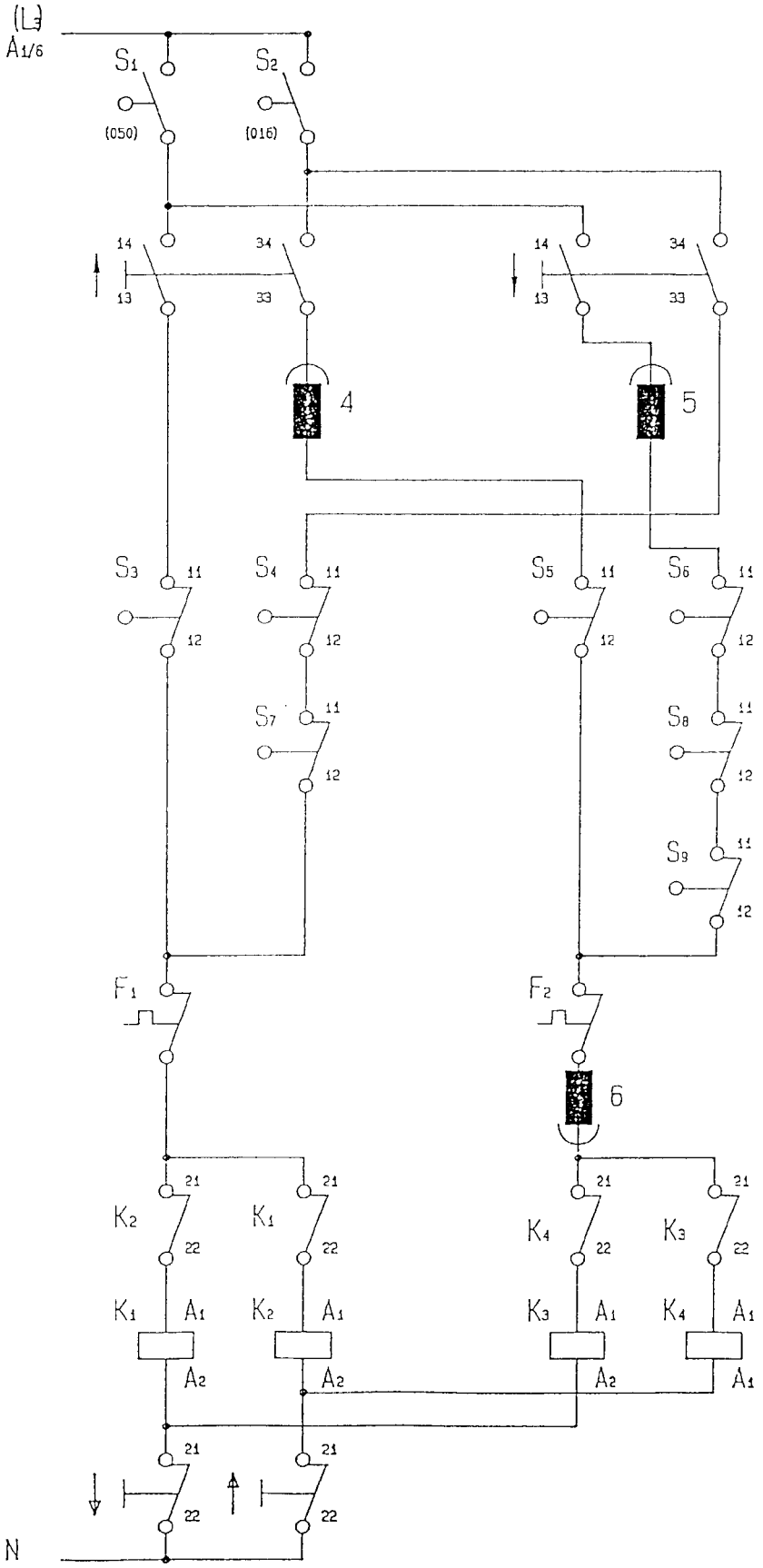

Electrical parts list

F01:	thermofuse in motor
F02:	thermofuse in motor
K1:	motor contactor
K2:	motor contactor
K3:	motor contactor
K4:	motor contactor
↑ :	button “lifting“
↓ :	button “lowering“
M1:	motor operating column
M2:	motor opposite column
S1:	switch group at tappet (upper side)
S2:	switch group at tappet (lower side)
S3:	top limit switch; operating column
S4:	bottom limit switch; operating column
S5:	top limit switch; opposite column
S6:	bottom limit switch; opposite column
S7:	switch at the top of the spindle
S8:	switch at the top of the spindle
A1:	main switch

4. Safety regulations

Using automotive lifts for working the Regulations of Accident Prevention (VBG1: General Regulations, VBG14: Automotive lifts) must be observed.

Especially the following regulations are very important

- The laden weight of the lifted vehicle mustn't be more than 5000 kg for automotive lift 2.50 SE, the lifting capacity of one carrying arm mustn't be more than 1500 kg for 2.50 SE. It is not allowed to load only one of the carrying arms.
- During working with the lift the operating instructions must be followed
- Only trained personnel over the age of 18 years old are to operate this lift
- During lifting or lowering the vehicle it must be observed from the operator
- It's not allowed to stay under the lifted or lowered vehicle (except for the operator)
- It's not allowed to transport passengers on the lift or in the vehicle
- It's not allowed to climb onto the lift during lifting or lowering or onto a lifted vehicle
- The Automotive Lift must be checked from an expert after changes in construction or after repairing carrying pads
- It's not allowed to start with operations at the lift before the main switch is switched off
- Switching on or switching off the lift pay attention that the lifting and lowering movement are steady
- It's not allowed to install the standard-automotive lift in hazardous location

5. Operating instructions

The Safety Regulations must be observed during working with the automotive lift. Read the safety regulations in capter 4 carefully before working with the lift!

Indication: lift can be adjusted repeatedly during operating

Lifting the vehicle with the automotive lift

- Drive vehicle in the lift, longitudinal directon and transverse direction in centre
- Determine adjustable pads at the points which are provieded from the vehicle manufacturer
- Control the dangerous places of the lift and be sure that there are no objects or people in the immediate area of the lift or on the lift
- lift the vehicle free and check the sit of the pads
- lift the vehicle until the wheels are free; press „lifting“ button

- If the wheels are free: interrupt lifting and check the sit of the pads again

The sit of the pads under the vehicle is very important. If the position of the pads isn't all right the vehicle might fall down!

- Lift the vehicle on the height for working

Lowering the vehicle with the automotive lift

- Control the dangerous places of the lift and be sure that there are no objects or people in the immediate area of the lift or on the lift
- Lower the vehicle at the height for working or until the carrying arms reach the lowest point;
- swing out the carrying arms
- Drive vehicle out of the lift, if the lift is in lowest position

6. Troubleshooting

If the lift does not work properly, the reason for this might be quite simple. Please check the lift for the potential reasons mentioned on the following pages. If the cause of trouble cannot be found, please call the technical service.

Repairs at the lift' s security devices as well as repairs and examinations of the electrical fittings may only be performed by specialists!

Problem: Motor does not start

Potential causes of trouble:
- Main switch is not engaged
- Feed line is cut
- fuse is defect
- Motor is overheated: let it cool down for app. 10 min.
- Lift is driven onto an obstacle

Problem: Motor starts, lift is not lifting!

Potential causes of trouble:
- broken nut: refer to function of switching off
- height limit switch is engaged
- torn control rope

Problem: Lift cannot be lowered!

Potential causes of trouble:
- bottom limit switch is engaged
- broken nut: refer to function of switching off
- torn control rope

Emergency lowering in case of power failure

In case of power failure the lift can't be lowered with the motor. In this case there is the possibility to lower the lift manually. Switch off and lock main switch and remove the cover of the Motors. For this the lift must be turned down to lowest position at the nut on the top end of the spindle. If the lift is at lowest position the vehicle can be removed from the lift.

. ***The emergency lowering must only be performed by persons instructed to use the lift. Please refer to the regulation "Lowering".***

Emergency lowering

- Switch off and lock main switch and remove the cover of the Motors.
- Loosen the control-rope. The rope can´t tear during the emergency lowering.
- Lower the lift, rotate alternately the nuts at the top of the spindle anticlockwiseuntil the lift is has the lowest position.
- If the lift is in the lowest position replace the defective parts and mount the control rope again.

Function of limit switches

If the lifting carriage or the extension arm has driven because of inattentiveness onto an obstacle, the motor stops, because the control switch is actuated by the tappet.

Actuation of safety switching

The lift is equipped with a safety switching, which controls the wear of the main nut. If the lifting nut breaks a safety nut which is conducted loose in the spindle carries the load. In case of broken lifting nut the tappet is pulled from the control rope until the position switches are pressed and both motors shut down.The lift cannot be operated from the operating elements any more. An emergency lowering must be leaded through. (see emergency lowering)

If the safety switching is actuated the service must be called in any case, because the lift is defect!

A control of the lift's current supply is necessary, means looking if the fuses are all right and the switches are engaged.

In case of any obstruction and in case of repairs at the lift the main switch must be switched off and be safeguarded against reengaging

Only experts or competent person are allowed to open the switch box.

Control of synchronization (mechanically)

To guarantee synchronization of the two lifting carriages, the lifting carriages are connected via control rope with a tappet. In case one lifting carriage is max. 20 mm earlier at a definite height, the tappet is pulled. The tappet presses one of the two position switches located at the tappet and this carriage which has been earlier at the definite height stops until both carriages are at the same height again.
In case of torn control rope a pressure spring presses the tappet down until both switches are pressed and both motors are switched off.

7. Maintenance

A regular service has to be performed every three months by the lift' s operator according to the following schedule. If the lift is in continuous operation or dirty environment, the maintenance rate has to be increased.
During daily operation the lift has to be watched carefully for its correct function. In case of any malfunction or leakage the technical service has to be informed.

Maintenance schedule for the lift

Grease the pull-outs of the carrying arms, bolts of pads and slide ways of carriage slide rollers
Lubricate spindle one time a month a little bit. The Saw-chain-bonding oil T 320 (OEST) is recommended.

Take care, that biological decomposable saw-chain-bonding oil is not used. In this case the lift might be damaged!

Check rubber flooring of the pads and change them if they are worn
Grease sequence nut one time a month with multipurpose fat. Use boring at lifting carriage
Grease spindle bearing annually with multipurpose fat
Grease control ropes and pulleys monthly with multipurpose fat a little bit and lubricate them with oil-spray (non-resin) a little bit.

If the lift is installed the lubricating felt between nut-support and lifting nut is to oil very well. Use a saw-chain oil which can also be used when the spindle is rotating and which doesn't be thrown away. The lift must be driven in lowest and in top position. Afterwards the lift must be checked with load to look after smooth running of the lift. The lubrication of the nut is carried out with oil can though column and cover. This lubrication must be repeated every 2-4 weaks depending on time the lift is used. It is refered to the emergency lubrication characteristic of the NYLATRON-lifting nut. However a regular lubrication described in the previous section guarantees a careless operating of the lift.

8. Security check

The security check is necessary to guarantee the safety of the lift during use. It has to be performed in the following cases:

1. Before the initial operation, after the first installation.
Use the form ”First security check”.
2. In regular intervals after the initial operation, at least annually.
Use the form ”Regular security check”.
3. Every time the construction of that particular lift has been changed.
Use the form ”Extraordinary security check”.

☞ ***The first and regular security checks must be performed by a competent. It is recommended to service the lift at this occasion.***

☞ ***After the construction of the lift has been changed (changing the lifting height or capacity for example) and after serious maintenance works (welding on carrying parts) an extraordinary security check must be performed by an expert.***

This manual contains form with a schedule for the security checks. Please use the adequate form for the security checks. The form should remain in this manual after they have been filled out. In the following there is a short description about special safety devices.

- carrying nut (optical wearing measure; see picture). To check the carrying nut take off covering from the spindle. There is a pin built in the carrying plate . This pin must be even with the top edge of the carrying. If the pin looks 2 mm out of the top edge at the annually check the carrying nut and the sequence nut must be changed.

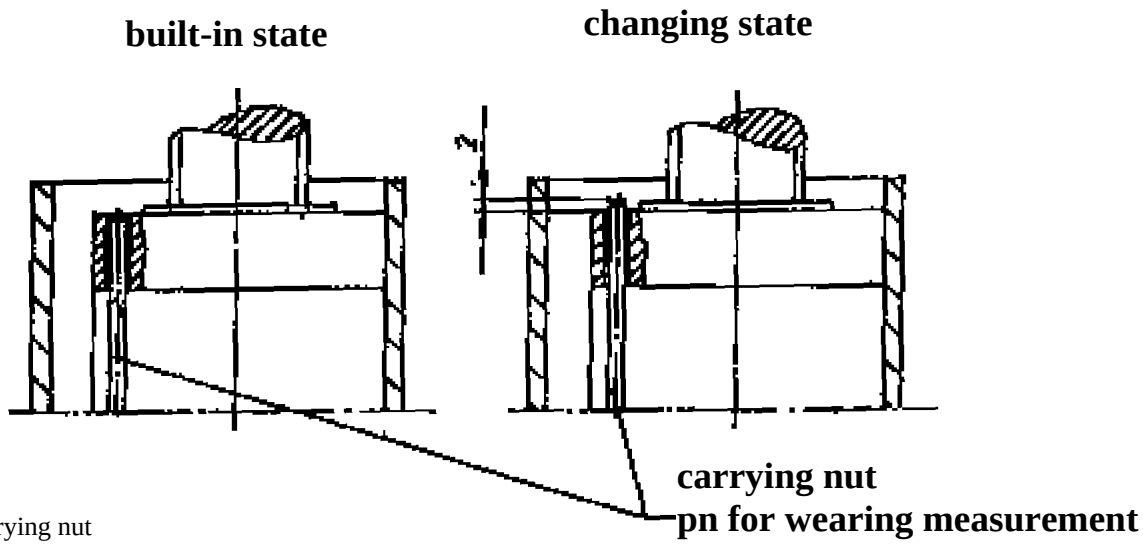

carrying nut

- Check height limit switch and bottom limit switch. They have to be all right otherwise the must be changed.
  Check of limit switches: One man must be lift or lower the lift. A second man actuates the height limit or the bottom limit switch. If the switches are all right the lift stops after every actuation.
- stability: The nuts of the dowels must be tightened with a dynometric key (M = 80 Nm)
- Installation in wash-halls: pay attention to safety of the electrical equipment against water

9. Installation and Initiation

Installation of the lift

Regulations for the installation

- The installation of the lift is performed by trained technicians of the manufacturer or its distribution partner. If the operator can provide trained mechanics, he can install the lift by himself. The installation has to be done according to this regulation.
- The standard lift must not be installed in hazardous locations or washing areas.
- Before installation a sufficient foundation must be proved or constructed (see foundation plan).
- An even installation place has to be provided. The foundations must be based in a frost resistance depth, both outside and indoors, where you must reckon with frost
- An electric supply 3~/N + PE, 400 V/230 V, 50 Hz has to be provided.The supply line must be protected witch T 16 A (VDE 0100). The min. diameter amounts to 1,5 mm^2.
- The cable entry in the column is located in operating column (motor box) topside (standard version). Another possibility is the location of cable entry in a boring at the base plate. However the cable has to be secured with a cable bushing.
- Installation in wash-halls: pay attention to safety of the electrical equipment against water

Erection and doweling of the lift

It is necessary to dowel the lift against slipping. For this you need a concrete floor with a thickness of at least 260 mm and a quality of at least B 25. In case of doubt a test boring has to be performed and a dowel is to set in. Afterwards the dowel must be tightened with a torque of about 80 Nm. If there are defectives (cracks or hairline cracks) in the zone of influence (Ø 200 mm), the foundation cannot be used to install the lift on it. A foundation must be constructed in accordance with the form ”foundation plan”.

It must be paid attention of an even installation place of the lift because of a straight contact between lift and concrete floor.

- Put and line up columns in accordance with data sheet to the installation place. Screw cable suspension bridge on columns
- Check position of the lift
- Bore holes to fix the dowels through the borings of the base plates. Clean holes with pressure air. Put in safety dowels with washers in borings. The manufacterer demands LIEBIG safety dowels type B 25. Before doweling check concrete floor with quality B 25 if the concrete floor goes to the top edge of the floor. In this case the dowels have to be chosen according to **picture 5**. If the ground is covered with floor tiles, the dowels have to be chosen according to **picture 6**.
- Check the line-up of the columns and look if they are vertical. If they aren't vertical correct with suitible bases.
- Tighten the dowels with a dynamometric key (M = 80 Nm)

Each dowel must be tightened with a torque of 80 Nm. The normal function of the lift cannnot be guaranteed

- If the possible torque is 80 Nm and if the arched U-washer lies flat on the checking plate after tightening of the dowelnut, you have got a safety dowel connection
- Unscrew coverings at the frontside and backside of the operating column.
- Connect power supply. The cable entry is at the top of the motor-box (operating column) for standard version. The coverings at frontside are only fixed at the top and can be pulled out after unscrewing. But for this the lifting carriages must be lowered to lowest position .

Installation of carrying arms

- Install carrying arms and bolts top and bottom with enclosed circlips .

The carrying bolts must be secured at both sides , otherwise a correct connection between lift carriage and carrying arm cannot be guaranteed.

Installation of control rope

- Pull Bowden-pull-wire through ascending pipes and through traverse.
- Pull hang-up nipple, which is connected with the end of the control-rope, from column headplate to lower side of **operating column.** Put control-rope round the pulley, which is connected with the tappet. Hang-in control rope at carriage.
- Course of the control rope at opposite side: Fix control rope at carriage upper side . After you have tightened the rope, the end of the rope should hang down

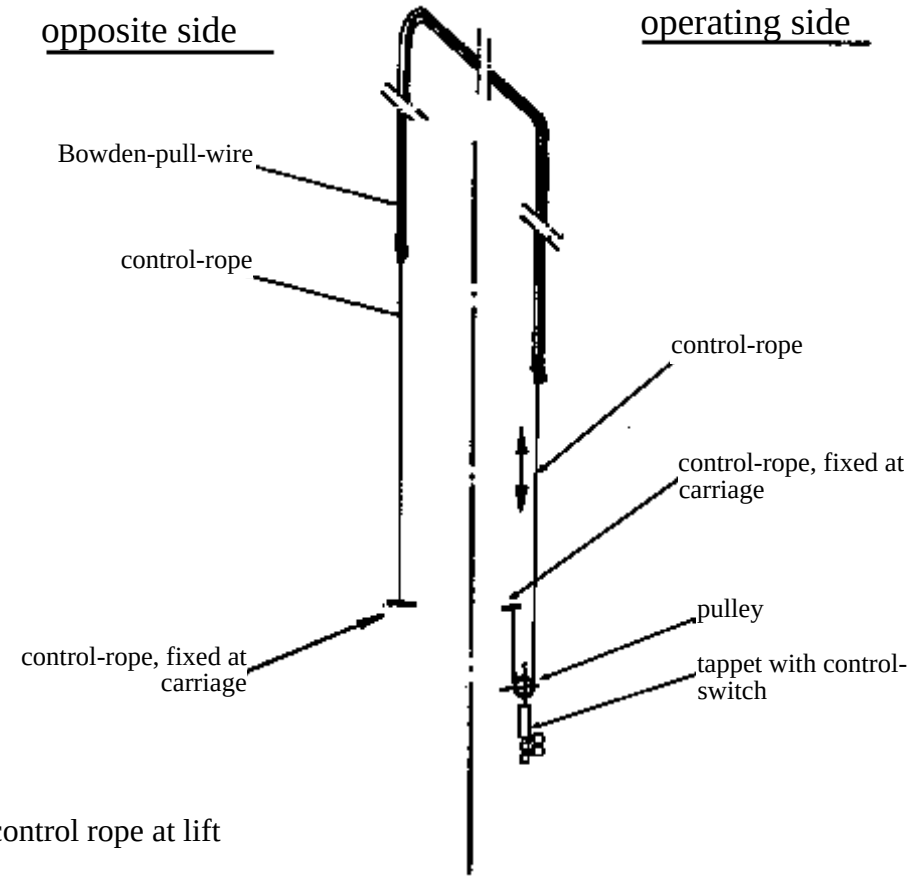

course of control rope at lift

approximatly 100 mm from the upper edge of the lifting carriage. Form a loop with the end of the rope, insert thimble and squeezing device and screw them slightly together. Now hang up thimble in the bow and check the rope if it is tighten enough, fasten screw tight.

- Adjusting of the lifting carriages: the lifting carriages must have the same level with

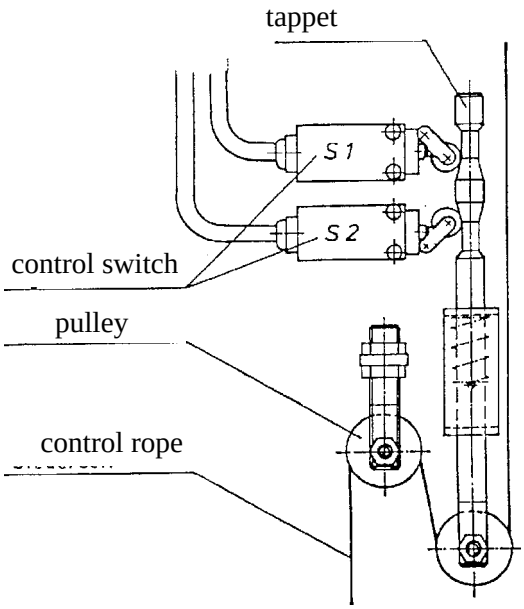

See the right position of the control switch after the installation of the control rope.

each other. To line up the carriage the tension pulley must be turned to lower or upper side until the switchgroup at the tappet have got the right position. The position of the switches must be parallel. the axis of the pulleys must be agree with the control edge and the pulley must be fitted straightly at the tappet.

- Control of adjustment: while lifting tap the switches briefly (one after the other) with finger: The following regulation must be recognized:

lifting: tapping the upper switch the motor of the operating side must stop. Tapping the lower switch the motor of the opposite side must stop.

lowering: tapping the upper switch the motor of the opposite side must stop. tapping the lower switch the motor of the operating side must stop.

Initiation

☞ ***Before the initiation a security check must be performed. Therefore use form: First security check.***

If the lift is installed by a competent, he will perform this security check. If the operator installs the lift by himself, he has to instruct a competent to perform the security check.

The competent confirms the faultless function of the lift in the installation record and the form for the security check and allows the lift to be used.

☞ ***Please send the filled installation record to the manufacturer after installation.***

Changing of the installation place

If the place of installation shall be changed, the new place has to be prepared according to the regulations of the first installation. The changing should be performed in accordance with the following points:

- lift carriage to medium height
- Take away current supply from lift
- Dismount carrying arms (take off ciclips from carrying arm bolts, take off carrying arm bolts and dismount carrying arms)
- Remove the control rope
- Loosen screws from base frame and take off columns
- Install lift in accordance with chapter ”Installation and Initiation” of the lift.

⚠ ***Use new dowels, The used dowels cannot be used any more.***

☞ ***A security check must be performed before reinitiation by a competent. Use form ”Regular security check”.***

Check the Spindle switch S4,S5 at the top of the spindle :
Remove the cover of the Motor.
Raise the lift until the wheels are free.
see Picture: the distance between the spindle and the switch is 1 mm.

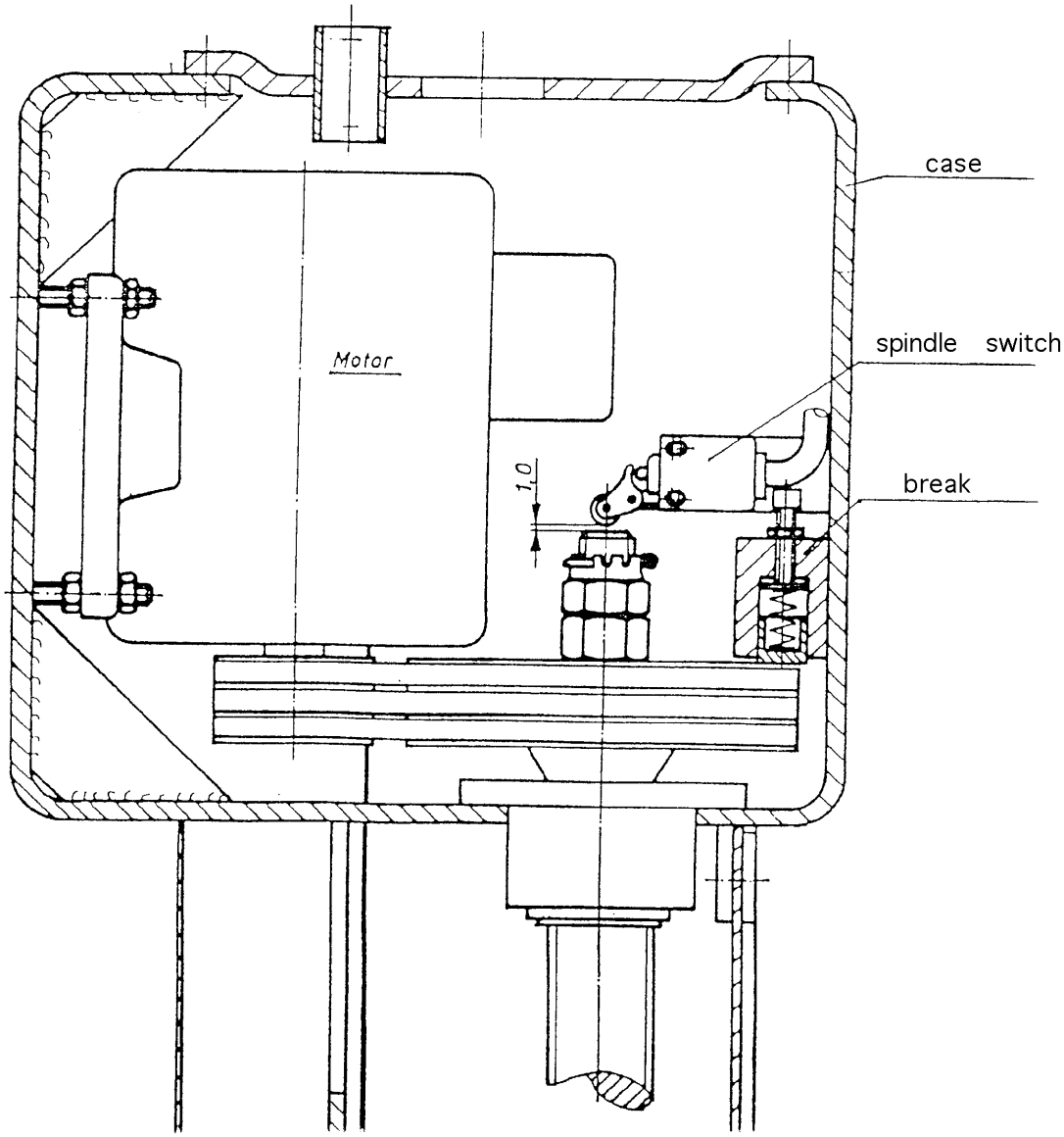

picture 5: choice of the dowel lengths 2.50 SE without floor pavement or tile surface

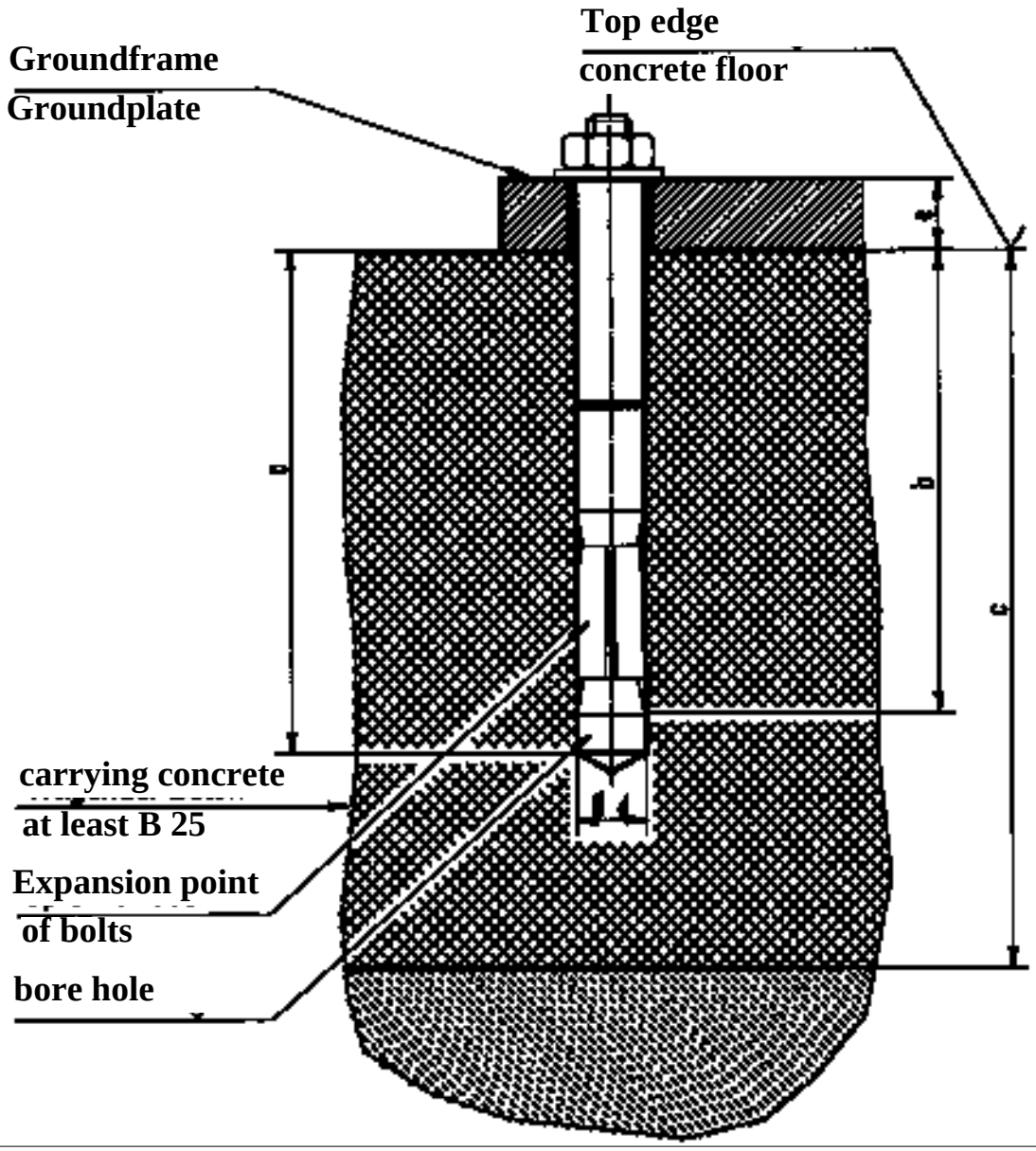

table to picture 5
Liebig Company Dowels

dowel type		B 25/130	B 25/165
Drilling depth	a	200	235
min. anchorage depth	b	165	165
thickness of concrete	c	260	260
diameter of bor	d	25	25
thickness of the Lift-piece	e	0-35	35-70
normal conditions			
number of dowels		16	16
torque 80 Nm			

You can use equal dowels of other manufacturers (with authorization) but observe the regualtion of the manufacturer.

picture 6: choice of the dowel lengths 2.50 SE with floor pavement or tile surface

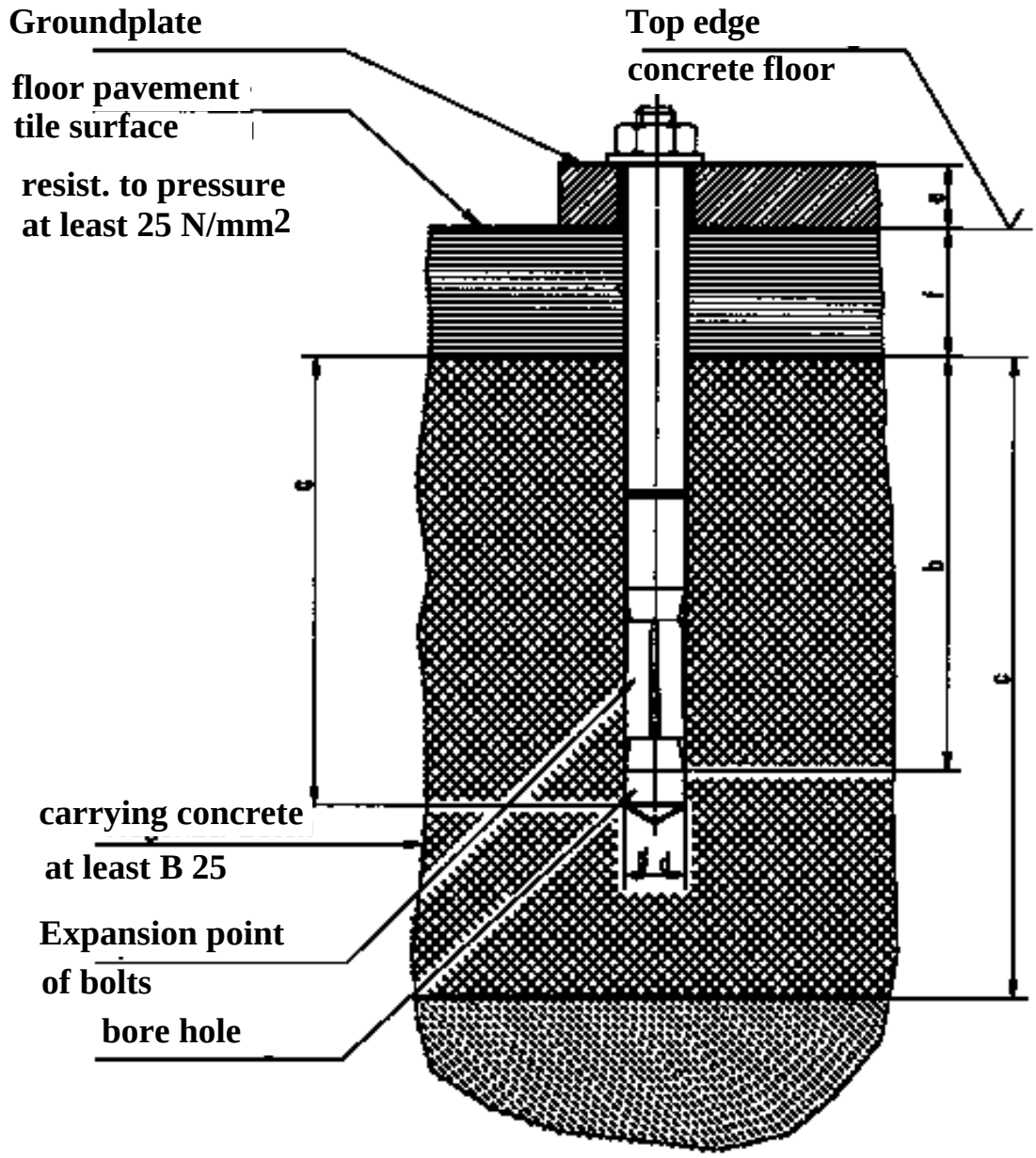

table to picture 6
Liebig Company Dowels

dowel type		B 25/130	B 25/165	B 25/190	B 25/240
Drilling depth	a	200	235	260	310
min. anchorage depth	b	165	165	165	165
thickness of concrete	c	260	260	260	260
diameter of bor	d	25	25	25	25
thickness of the Lift-piece	e+f	0-35	35-70	70-95	95-145
normal conditions					
number of dowels		16	16	16	16
torque 80 Nm					

You can use equal dowels of other manufacturers (with authorization) but observe the regualtion of the manufacturer.

Nußbaum HEBETECHNIK	security check 2.50 SE

First security check before installation

☞ **to fill in and to leave in this document**

kind of check	all right	defect lacking	veri-fication	Remark
Type plate	☐	☐	☐	.....
Short operating instructions	☐	☐	☐	.....
Warning designation	☐	☐	☐	.....
Detailed operating instructions	☐	☐	☐	.....
Designation Lifting/Lowering	☐	☐	☐	.....
Main switch lockable	☐	☐	☐	.....
Function switching off	☐	☐	☐	.....
Rotating direction of motor	☐	☐	☐	.....
Securing of carrying arm bolts	☐	☐	☐	.....
Securing of pads	☐	☐	☐	.....
Construction (deformation, cracking)	☐	☐	☐	.....
Fixed seat of the carrying screws	☐	☐	☐	.....
Condition spindle and carrying nut	☐	☐	☐	.....
Smooth running of the lift	☐	☐	☐	.....
Stability of the lift	☐	☐	☐	.....
Function equalisation control	☐	☐	☐	.....
Condition coverings	☐	☐	☐	.....
Condition electrical wiring	☐	☐	☐	.....
Protective conductor	☐	☐	☐	.....
Function test automotive lift with vehicle	☐	☐	☐	.....
Condition concrete floor (cracks)	☐	☐	☐	.....
Fixing device	☐	☐	☐	.....
Condition bolt	☐	☐	☐	.....

(mark where applicable, in case of verification mark in addition to the first mark!)

---

security check carried out: .....

Name, address of the competent.....

Result of the Check:

☐ Initation not permitted, verification necessary

☐ Initation possible, repair failures until .....

☐ No failings, Initation possible

Signature of the expert:..... Signature of the operator:.....

If failures must be repaired

Failures repaired at: ..... Signature of the operator:.....

(Use anather form for verification!)

Regular security check

☞ **to fill in and to leave in this document**

kind of check	all right	defect lacking	veri-fication	Remark
Type plate				
Short operating instructions				
Warning designation				
Detailed operating instructions				
Designation Lifting/Lowering				
Main switch lockable				
Function switching off				
Rotating direction of motor				
Securing of carrying arm bolts				
Securing of pads				
Construction (deformation, cracking)				
Fixed seat of the carrying screws				
Condition spindle and carrying nut				
Smooth running of the lift				
Stability of the lift				
Function equalisation control				
Condition coverings				
Condition electrical wiring				
Protective conductor				
Function test automotive lift with vehicle				
Condition concrete floor (cracks)				
Fixing device				
Condition bolt				

(mark where applicable, in case of verification mark in addition to the first mark!)

security check carried out: .....

Name, address of the competent.....

Result of the Check:

Initation not permitted, verification necessary

Initation possible, repair failures until .....

No failings, Initation possible

Signature of the expert:..... Signature of the operator:.....

If failures must be repaired

Failures repaired at: ..... Signature of the operator:.....

(Use anather form for verification!)

Extraordinary security check

to fill in and to leave in this document

kind of check	all right	defect lacking	veri-fication	Remark
Type plate	☐	☐	☐	.....
Short operating instructions.....	☐	☐	☐	.....
Warning designation	☐	☐	☐	.....
Detailed operating instructions.....	☐	☐	☐	.....
Designation Lifting/Lowering	☐	☐	☐	.....
Main switch lockable.....	☐	☐	☐	.....
Function switching off.....	☐	☐	☐	.....
Rotating direction of motor.....	☐	☐	☐	.....
Securing of carrying arm bolts.....	☐	☐	☐	.....
Securing of pads	☐	☐	☐	.....
Construction (deformation, cracking)	☐	☐	☐	.....
Fixed seat of the carrying screws	☐	☐	☐	.....
Condition spindle and carrying nut.....	☐	☐	☐	.....
Smooth running of the lift.....	☐	☐	☐	.....
Stability of the lift.....	☐	☐	☐	.....
Function equalisation control.....	☐	☐	☐	.....
Condition coverings	☐	☐	☐	.....
Condition electrical wiring	☐	☐	☐	.....
Protective conductor	☐	☐	☐	.....
Function test automotive lift with vehicle ..	☐	☐	☐	.....
Condition concrete floor (cracks)	☐	☐	☐	.....
Zustand Tragarmarretierungen.....	☐	☐	☐	.....
Zustand Bolzen	☐	☐	☐	.....

(mark where applicable, in case of verification mark in addition to the first mark!)

security check carried out: .....

Name, address of the competent.....

Result of the Check:

Initation not permitted, verification necessary

Initation possible, repair failures until .....

No failings, Initation possible

Signature of the expert:..... Signature of the operator:.....

If failures must be repaired

Failures repaired at: ..... Signature of the operator:.....

(Use anather form for verification!)